Specification Sheet

Part Number
35106

www.allenfield.com
(800) 535-0810
info@allenfield.com

Product Description	
Item Name	6.5" Elliptical Handle
Size	6.50"(L) x 1.125"(W)
Carrying Capacity	Up to 50 lbs.
Material	PE
Ordering Information	
351060530	Translucent
351061030	White
351068030	Black
Packaging Information	
Carton Pack/MOQ	2500 pcs/ctn.
Carton Weight	35 lbs.

Product Image

Related Support Plates

35750

35755

* **Patent Protected**
For more information visit
https://www.allenfield.com/patents/

Product Dimensions

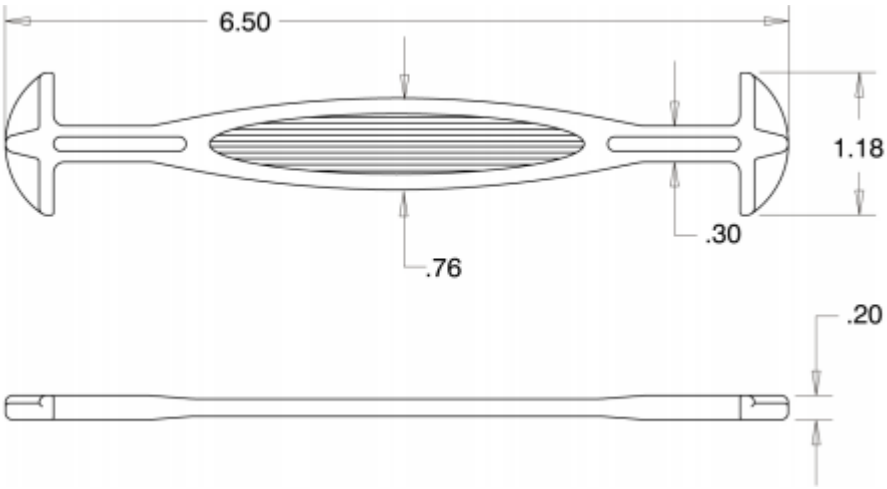

Die-Cut "E" Dimensions

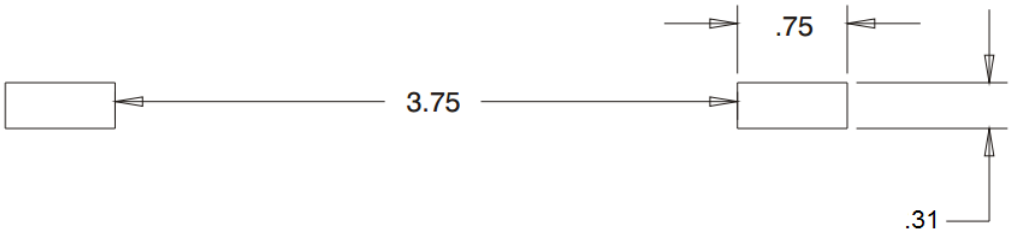

Part Tolerance — +/- .03 inches (.75 mm)

Dimensions are in inches