Specification Sheet

Part Number
30895

www.allenfield.com
(800) 535-0810
info@allenfield.com

Product Description	
Item Name	Small Anchor Hook
Size	0.85"(W) x 1.21"(H)
Material	PP
Ordering Information	
308951040	White
308958040	Black
Packaging Information	
Carton Pack/MOQ	25000 pcs/ctn.
Carton Weight	18 lbs.

Product Images

Related Item

30899

Product Dimensions

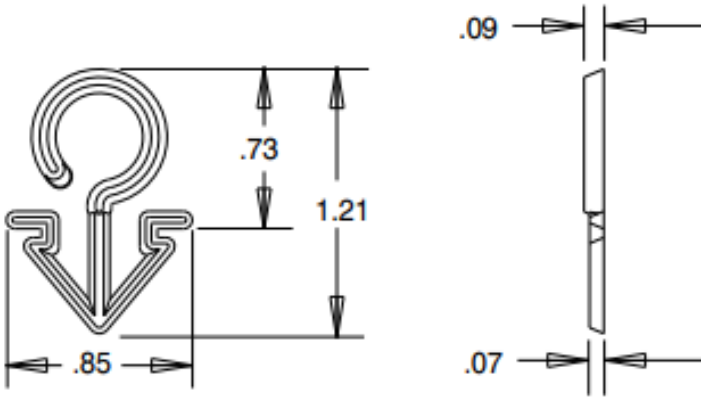

Die-Cut Dimensions

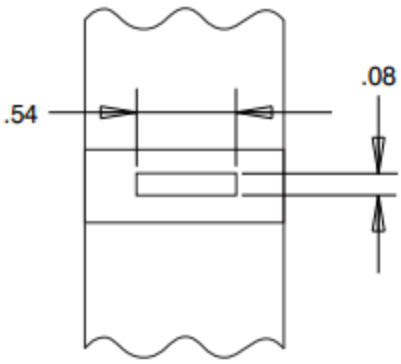

Part Tolerance — +/- .03 inches (.75mm)

Dimensions are in inches